prosthetic.line

CM LOC®

The anchor system.

CENDRES+ MÉTAUX Medtech


OC
NI

The CM LOC® is a simple, hygienic, user-friendly and patient-friendly solution for hybrid dentures with a significant advantage: divergences between implant and abutment can be corrected up to 60° (± 30°). Thus, the CM LOC® anchor system covers a wide range of clinical applications and simplifies the insertion of dentures.

CM LOC® – the anchor system.
Benefits.

Modular
A complete, modular prosthetic system for a wide range of clinical applications.

Hygienic
Abutment design without central retention hole for better clinical functionality and increased wearing comfort and ease of cleaning.

Easy
User- and patient-friendly application.

Compatible
The CM LOC® and CM LOC® FLEX abutments are available for all common implant systems.

Long-lasting
Optimised female part design with retention inserts made of the high-performance polymer Pekkton® for high wear resistance.

Alignable
CM LOC® FLEX: divergences of up to 60° can be compensated for to provide stress-free insertion of the prosthesis.

CM LOC®

Modularly structured implant anchor system.

Dentures require a high degree of maximum planning flexibility, durability, wearing comfort and system compatibility. Be it for implant-supported hybrid dentures, as an additional retention element on CAD/CAM milled bars or for the restoration of endodontic situations – the CM LOC® anchor system provides a maximum modular prosthetic system for universal applications. CM LOC® represents flexibility for the clinician and comfort for the patient.

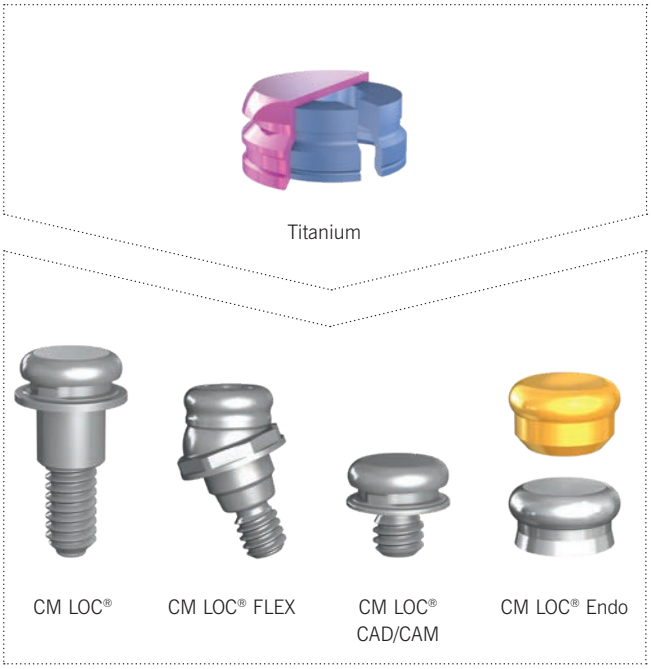

CM LOC® Abutment.
Functional and flexible design.

Cendres+Métaux developed a modular abutment concept with improved design to meet the complex and challenging clinical situation of hybrid dentures. This allows the clinician maximum flexibility in clinical use as well as providing the patient with increased wearing comfort and ease of cleaning.

Functionality
- Due to the lack of a central retention hole, there is no accumulation of food residues and plaque.
- Increased wearing comfort and ease of cleaning.

Quality
Swiss Made – designed and manufactured by Cendres+Métaux SA.

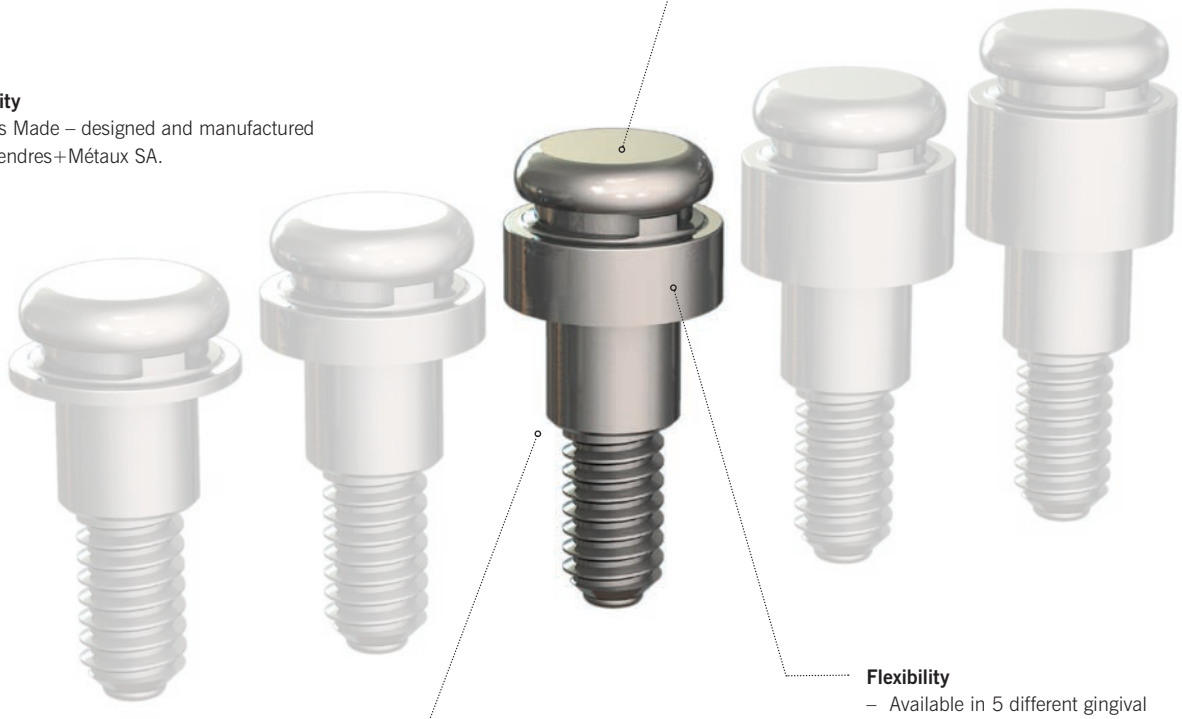

Compatibility
The CM LOC® and CM LOC® FLEX abutments are available for all common implant systems. The compatibility list is available at www.cmsa.ch/docs.

Flexibility
- Available in 5 different gingival heights: 1–5 mm.
- Compact and slim design for optimum use in confined spatial conditions.
- With the CM LOC® abutment and the CM LOC® FLEX abutment, corrections of 20° and 60° respectively, are possible for divergently placed implants.

CM LOC® – design of the female part.

Female part with interchangeable retention inserts.

The design of the female part with retention inserts made of the high-performance polymer Pekkton® offers good wear resistance, which also enables the restoration of existing Locator®-like abutments.
The CM LOC® female parts are available with four easily exchangeable retention inserts in four defined force levels. The gingiva-coloured female part provides for aesthetic solutions.

Scientific evidence
In-house as well as independent external studies[1] substantiate the good wear resistance versus conventional solutions and confirm Cendres+Métaux's commitment to manufacturing products of the highest quality and know-how.

Pekkton® retention inserts.

Female part

Male part

extra-low	low	medium	strong
approx. 400 g	approx. 1,200 g	approx. 1,800 g	approx. 2,400 g

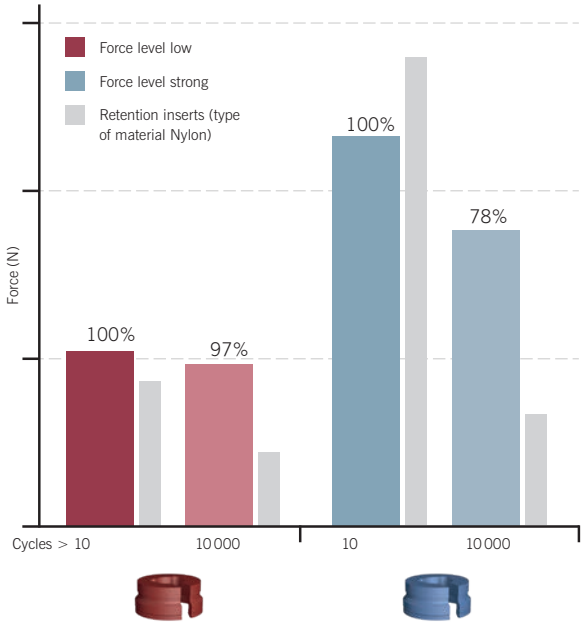

Due to the use of Pekkton®, the design of the anchorage and the new design of the male part, the wear behaviour in vitro is improved considerably.

Excursus: Pekkton® – the material of the future
The high-performance polymer Pekkton® is a solution for a definitive aesthetic restoration on implants. Resembling human bone, Pekkton® adapts with simple biomechanical integration in the mouth. Owing to the low weight of the denture and its ability to absorb loads, patients benefit from completely new wearing comfort. The PEKK material used for Pekkton® originates from the PAEK materials family and offers excellent mechanical properties. The high-performance polymer has established itself as a popular material for frameworks in prosthetics, in particular for superstructures. The material can be milled and pressed.

The advantages of Pekkton®:
- Shock-absorbing
- Metal-free
- High stability in thin sections
- Biocompatible
- Tasteless
- No thermal or electrical conductivity

[1] Long-term retention behaviour of resin matrix attachment systems for overdentures. Passia et al. Department of Prosthodontics, Propadeutics and Dental Materials, School of Dentistry, Christian-Albrechts University, Kiel, Germany

CM LOC® FLEX.
The flexible system.

With the CM LOC® FLEX, divergences between implant and abutment can be corrected up to **60° (± 30°)**. This allows a wide range of clinical applications to be covered. The prosthesis can be integrated easily and comfortably almost in parallel to the occlusal plane. The new shape of the CM LOC® FLEX allows stress reduction of the system components to be achieved.

CM LOC® FLEX

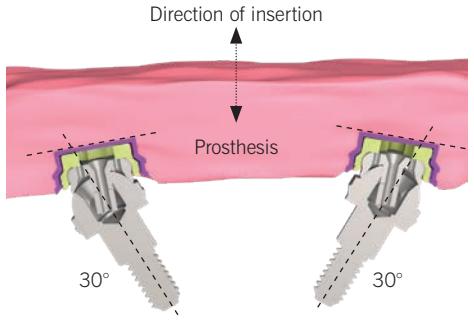

Conventional systems

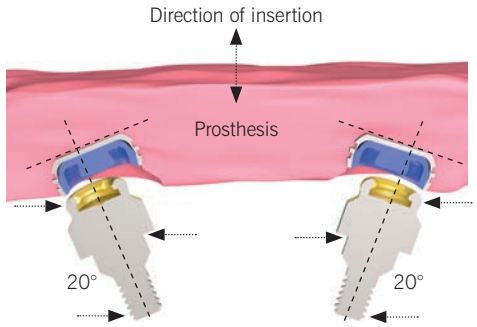

Approach to divergent implant positions

Bonding recommendation
We recommend the use of a commercial, mouth-compatible and self-adhesive composite bonding cement.

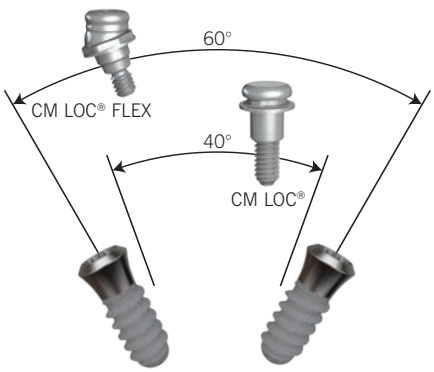

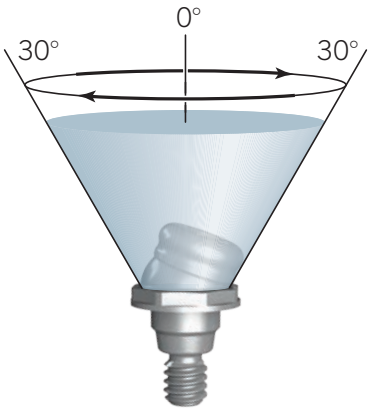

Fig. 1
Position 1: the aligner closes the filling hole for the injection.

Fig. 2
Position 2: the aligner enables easy alignment of the abutment in the mouth.

Fig. 1 Fig. 2

Technical data.

CM LOC® Abutment
Corrections of divergences up to
max. 20° are possible per implant.

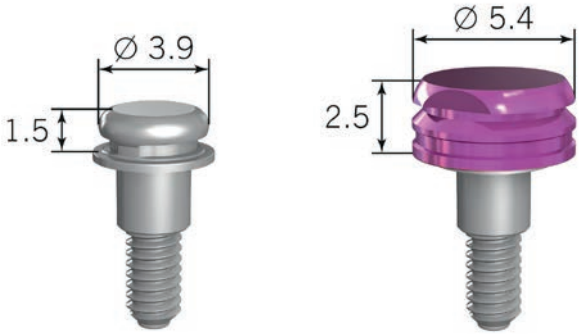

CM LOC® FLEX Abutment:
Corrections of divergences up to
max. 30° are possible per implant.

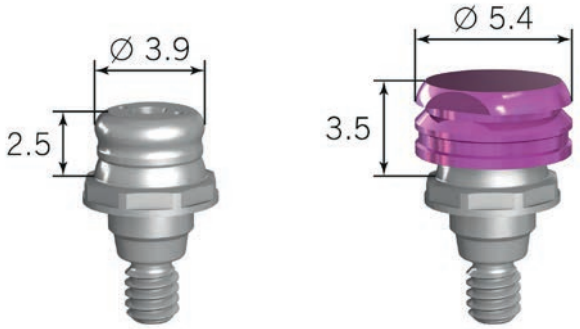

CM LOC® CAD/CAM Retention element
– Retention element for bar
– M2 standard thread

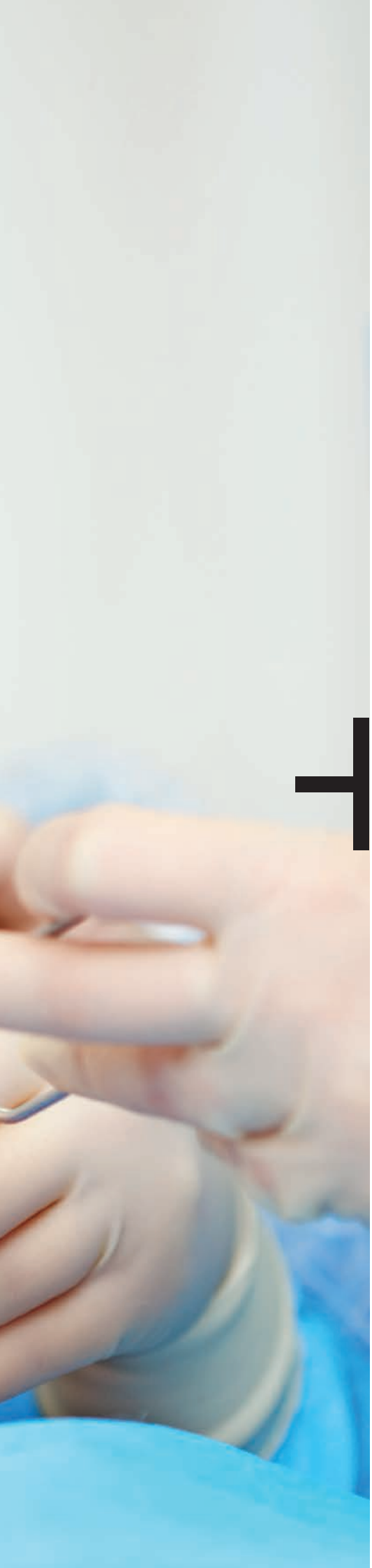

Some interesting case studies with CM LOC® showing typical applications of this versatile anchor system.

Clinical cases.

Mandibular prosthesis, conversion to CM LOC®

Case planning

Abutment in situ

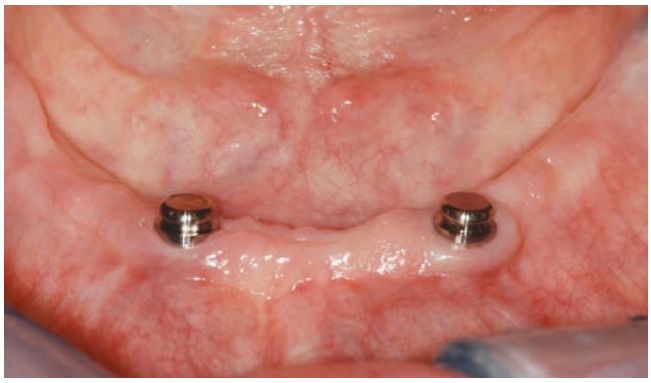

Female part mounted on analog

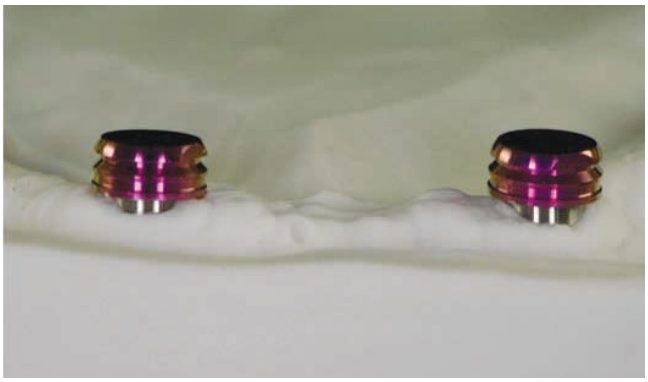

Final prosthesis

Prof. Dr. med. dent. Joannis Katsoulis, Clinic for Reconstructive Dentistry and Gerodontology, University of Berne, Switzerland
MDT Patrick Zimmermann, Zahnmanufaktur Zimmermann & Mäder, Berne, Switzerland

CM LOC® CAD/CAM retention element on milled bar

Work in the laboratory

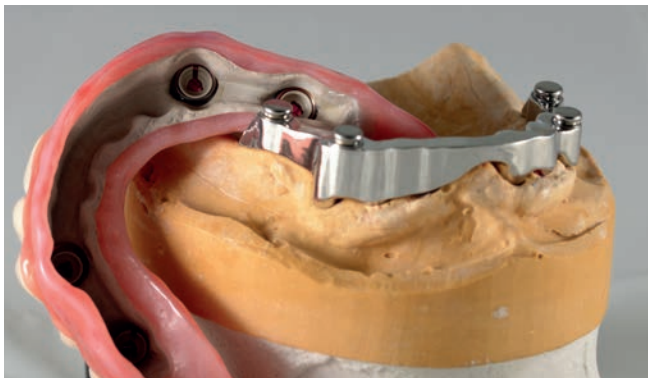

CAD/CAM-milled reinforcing framework made of Pekkton®

Mounted CAD/CAM retention element on bar

Lider-Tech Dental Lab, Łukasz Sopałowicz, Poland

Portfolio.

Cat. No.		Material/Sets		Contents
See Web		T	CM LOC® Abutment	1 pc.
See Web		T	CM LOC® FLEX Abutment incl. Aligner	1 pc.
0500 1304		T	CM LOC® CAD/CAM Retention element Retention element for bar	1 pc.
See Web		T	CM LOC® Case Guide	1 pc.
See Web		T	CM LOC® FLEX Case Guide	1 pc.
0500 1605		C	CM LOC® Male part C Cast-on / soldering technique	1 pc.
0500 1606		E	CM LOC® Male part E Laser welding technique	1 pc.
0500 3001		TPS	CM LOC® Basic Set Titanium	2x Female part housing titanium 2x Retention insert, extra-low 2x Retention insert, low 2x Retention insert, medium 2x Block-out spacer 2X Processing insert
0500 1995		T	CM LOC® Housing Titanium for Pekkton® inserts	4 pcs.
0500 1314		P	CM LOC® Retention insert, extra-low	4 pcs.
0500 1315		P	CM LOC® Retention insert, low	4 pcs.
0500 1316		P	CM LOC® Retention insert, medium	4 pcs.
0500 1317		P	CM LOC® Retention insert, strong	4 pcs.
0500 1328		P	CM LOC® Processing insert	4 pcs.
0500 1306		P	CM LOC® Housing Pekkton® for Pekkton® inserts	4 pcs.

Cat. No.		Material/Sets		Contents
07000201		P	CM LOC® Spacer	4 pcs.
07000202		S	CM LOC® Block-out spacer for female part insertion	4 pcs.
07000204		T	CM LOC® Analog	4 pcs.
07000205		T	CM LOC® Multi-tool for Pekkton® Retention insert	1 pc.
07000206		X	CM LOC® Driver for CM LOC® Abutment	1 pc.
07000222		X	CM LOC® FLEX Driver for CM LOC® FLEX Abutment	1 pc.
07000213		P	CM LOC® Impression part	4 pcs.
07000217		X	CM LOC® Housing Extractor	1 pc.
07000219		T	CM LOC® Parallelometer insert	1 pc.
07000200			CM LOC® Instrument Set	with 5 instruments
07000223		POM	CM LOC® FLEX Aligner	1 pc.

CENDRES+
MÉTAUX
Medtech

Cendres+Métaux SA
Rue de Boujean 122
CH-2501 Biel/Bienne

Phone +41 58 360 20 00
Fax +41 58 360 20 10
info@cmsa.ch

www.cmsa.ch

1015.03.01.01 | 02.2019